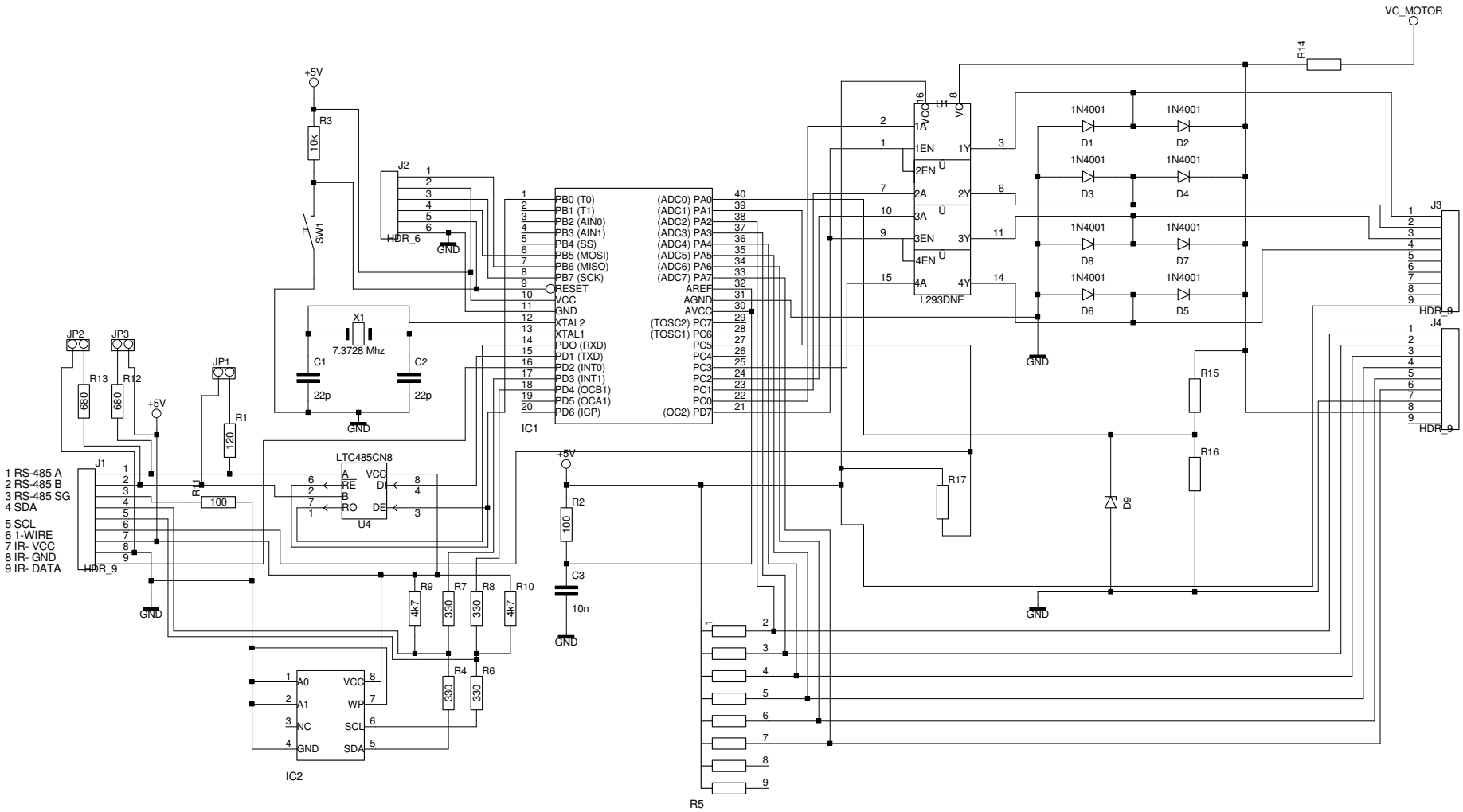

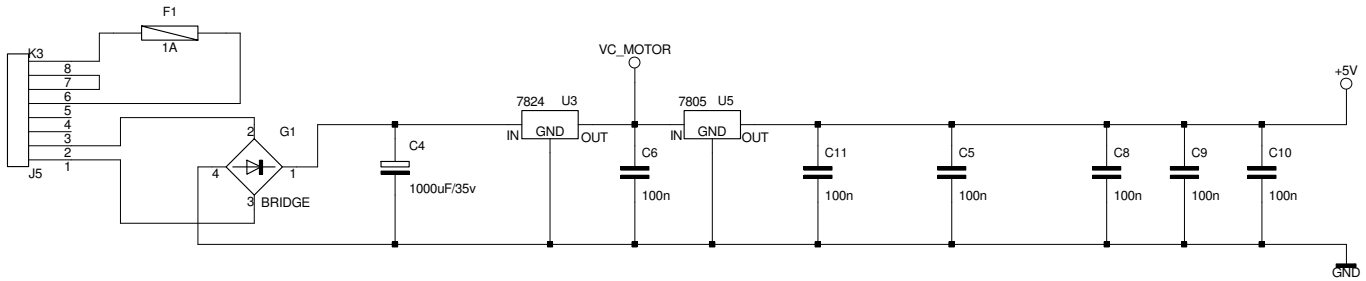

REV: 1.0	DATE: 05-10-2003	ENG: EVERT DEKKER
PROJECT: JALOZIEEN CONTROLER		
COMPANY: ? ADRESS: ? CITY : ? COUNTRY: THE NETHERLANDS		
INITIAL DATE: 05-10-2003	PAGE: 1	OF: 1